Medical Case Reports Journal

Available Online: http://mcrj.edwiserinternational.com

Simple Way to Reduce Radiation Exposure in the Orthopaedic Operating Theater: An 18-month Prospective Study

Jae-Man Kwak[1], Sung-Keun Heo[2] and Gu-Hee Jung[3]*

[1]Medical Center, Central Defence Command, Republic of Korea Army, Seoul, Korea
[2]Department of orthopaedic surgery, Gi-Jang Hospital, Busan, Republic of Korea
[3]Department of Orthopaedic Surgery, Gyeongsang National University, College of Medicine and Gyeongsang National University Changwon Hospital, Sungsan-gu, Changwon-si, Korea

Article info

Received 19 February 2018
Revised 01 October 2018
Published 26 December 2018

*Corresponding author: Gu-Hee Jung, Department of Orthopaedic Surgery, College of Medicine and Gyeongsang National University Changwon Hospital, Korea, Tel: +82-55-214-3822;
E-mail: jyujin2001@hotmail.com

Abstract

Background: *Orthopaedic trauma surgeons are increasingly exposed to ionizing radiation owing to a rise in the number of fluoroscopically-guided procedures. This study measured radiation exposure to the trauma surgeon and the operation room personnel as part of the study after applying our strategy in minimizing exposure risk and compared the results to the exposure in the surgical field.*

Materials and Methods: *From July 2012 to December 2013, we prospectively measured radiation exposure using five Thermo-luminescent Dosimeters (TLDs) placed in the surgical field, on the first assistant, on the trauma surgeon below and upon the lead apron at the chest level, and at a constant distance-maintained point behind the image intensifier, being 146 cm from the X-ray tube. To keep radiation exposure to as low as possible, a simple strategy was followed, which consisted of a particular room set-up and instructions on how to use the image intensifier. Concerning the room arrangement, the fluoroscopic monitor was placed at least 1.5 m away from the operating table. As such, the surgeon and the assistants had to move toward the monitor and turn against the image intensifier to view and verify the fluoroscopic images.*

Results: *The total radiation time in 185 procedures was 141 min, 56 sec. TLD exposure in the surgical field was 5.58 mSv (representing 100% exposure). TLD for the first assistant was 0.09 mSv (exposure ratio of 1.61%). The distance-maintained TLD exposure was 0.06 mSv (exposure ratio of 1.08%). TLD exposure over and under the lead apron of the trauma surgeon was 1.25 mSv and 0.06 mSv, respectively, corresponding to an exposure ratio of 22.4% and 1.08%, respectively.*

Conclusion: *By following simple guidelines and the surgeon's awareness in reducing use-time, the orthopaedic trauma team could significantly reduce radiation exposure. From the analysis of distance-maintained TLD (146 cm), the radiation exposure could be kept to as low as possible by both maintaining a 1.5 m distance from the source and wearing a lead apron.*

Keywords: Radiation; Fluoroscopy; Trauma surgery; Radiation hazard

Introduction

Since its discovery in 1895, the X-ray has been widely used in the medical field, including orthopedic surgery. In the field, image intensifier is essential for fracture reduction, instrument localization and navigation, plus other functions during trauma surgery. Since the surgical method of closed intramedullary nail fixation for femur and tibia shaft fracture under an image intensifier began to be widely used, the occupational radiation exposure to trauma surgeons has increased. Accordingly, the radiation hazard to trauma surgeons has started to be reported and studied for its potential hazards since the 1980s [1-3]. Despite the potential dangers, intraoperative exposure to radiation due to fluoroscopically-guided procedures have not changed or has even increased. As recent studies [4-7] have focused on dose per procedure exposure rather than cumulative or annual doses, use of estimates from these studies as a reference concerning occupational exposure in the setting of an orthopaedic trauma center is of limited value. Thus, compared with the recommended dose limit per year, the actual received dose of orthopaedic trauma surgeon cannot be certain.

It is known that radiation exposure poses a risk to orthopedic surgeons, with a relative risk of cancer being 5.37 times greater compared with the general population [8]. Another study also reported a 1.9-fold greater cancer rate for female orthopaedic surgeons [9]. Given the risk of radiation exposure in radiologic technologists [8,9], the occupational radiation exposure for orthopaedic trauma surgeon may not be ignored. As the frequency of soft tissue-preservation surgeries, such as minimally invasive plate osteosynthesis (MIPO) for complex fracture, has increased, concerns for excessive radiation exposure to the operation room personnel (ORP) are still significant. Despite the concerns for chronic cumulative intraoperative radiation exposure, a strategy to reduce the radiation exposure particularly for an orthopaedic surgeon was only recently published [10,11].

To the best of our knowledge, there has been no report on quantifying the results of strategies to reduce occupational radiation exposure for an orthopaedic trauma surgeon. The present prospective study measured the intraoperative radiation exposure for orthopedic trauma surgeons and ORP during fluoroscopically-guided surgery following exposure reduction strategies.

Materials and Methods

This study design received institutional review board (IRB) approval in our institution. We conducted an 18-month prospective study between 1 July 2012 and 31 December 2013 to monitor the degree of occupational radiation exposure by an orthopaedic trauma surgeon, first assistants and ORP during fluoroscopically-guided surgeries. To verify the occupational radiation exposure, we planned to use five thermoluminescent dosimeters (TLDs).

A single orthopaedic trauma surgeon and first assistants who were given the same type of TLDs actively participated in the protocol. Two of TLDs were always worn both on and below the lead apron at the chest level of the trauma surgeon during all fluoroscopically-guided surgeries. In addition, a third TLD was placed at the surgical field, which corresponded as the reference point to compare exposure ratios with other TLDs.

A fourth TLD was placed at the chest height on the first assistant, below the lead apron. Finally, a fifth TLD was positioned behind the image intensifier at a constant distance of 146 cm from the X-ray tube (Figure 1). This constant distance measurement represented the radiation exposure of the ORP including the scrub nurse, and the anesthesiologist at a safe distance.

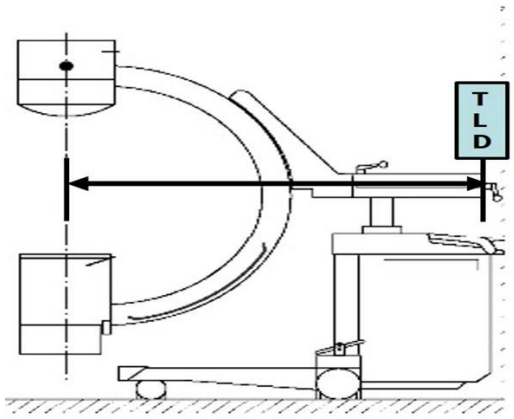

Figure 1: TLD positioned behind of the image intensifier, 146 cm from the X-ray tube.

During the prospective measurement period, the trauma surgeon always maintained the strategy of minimizing radiation exposure. This strategy also concerned the room set-up and guidelines for using the image intensifier. For the room set-up, the fluoroscopic monitor was placed against a wall and was maintained at least 1.5 m from the operating table. By this set-up,

the surgeon had to move toward the monitor and turn against the image intensifier to verify the fluoroscopic images. Thus, before the image on the intensifier was captured, the surgeon and the first assistant moved toward the fluoroscopic monitor for reducing radiation scatter and maintaining a distance of at least 1 m from the image intensifier (Figure 2). Fluoroscopic guidelines included frequent use of the memory mode, skin marking, provisional fixation and others (Table 1) [11-13].

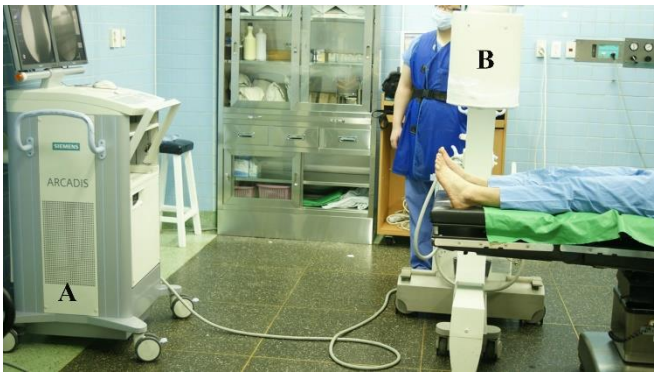

Figure 2: Set-up of the operation theatre; (A) The fluoroscopic monitor was at least 1.5 m away from the operating table and was against the wall. (B) The X-ray tube was inverted to reduce radiation scatter.

Table 1: Strategy to reduce radiation exposure during fluoroscopically guided operation.

Use the inverted C arm method
Wear the appropriate lead apron
Use the pulsed fluoroscopy, not the fluoroscopy
Use the image memory mode whenever possible
Position the fluoroscopic monitor at least 1.5 m away from the operating table against the wall
Stand behind the image intensifier during fluoroscopic projection
Use the mark-pen and temporary K-wire fixation for temporary fixation whenever possible
Retrieve the intraoperative radiation emission data from fluoroscopy machine after the surgery

During the study period, 185 fluoroscopically-guided surgeries were performed in 144 patients by a single trauma surgeon. The operations consisted of 49 intramedullary nail fixation cases, 45 MIPO cases, 66 open plating cases, 20 pin fixation cases, and 5 device removals. Twenty cases had multiple fractures at more than 2 sites.

The pin fixation included the K-wire fixation and application of spanning external fixator. The cases of open plating were ankle fracture, pilon fracture, proximal tibia fracture, pelvic acetabular fracture and other joint fractures. Throughout the investigation, the total monitor use time of the ACARDIS Varic® image intensifier (Siemens, Munich, Germany) was 141 minutes and 56 seconds.

Results

No radiation-related complications including acute sickness, diagnosis of thyroid cancer or cataracts were evident among the orthopaedic trauma team during the investigation. Lead aprons remained intact and protective, and there was no leakage from the X-ray housing unit.

The radiation exposure of surgical field TLD was 5.58 mSv, which corresponded to the actual amount of intraoperative radiation emission to the patients throughout the investigation. The TLD reading of the orthopaedic trauma surgeon was 0.06 mSv below the lead and 1.25 mSv on the lead apron.

Table 2: Summary of fluoroscopic use and radiation exposure; [a: Intramedullary nail fixation, b: Minimally Invasive Plate Osteosynthesis, c: K-wre fixation, d: The exposure of surgical field was not protected and exposed to 100%].

Case No	Descriptions
Surgeries (185 procedures)	IMNa (49), 45 MIPOb (45), open plating (66) cases, pin fixationc (20), and device removals (5)
Use-time	141 min 56 sec (each operation, 46 seconds)
TLD on surgical field (emission)	5.58 mSv (100%d)
TLD on the lead apron (surgeon)	1.25 mSv (22.4%)
TLD below the lead apron (surgeon)	0.06 mSv (1.08%)
TLD below the lead apron (1st assistant)	0.09 mSv (1.61%)
TLD behind of image intensifier (146 cm)	0.06 mSv (1.08%)

Using the surgical field's exposure as the reference, the exposure of orthopaedic surgeon was 1.08% for the

TLD under the lead apron and 22.4% for the TLD located outside of the lead apron, which would mean the ratio of radiation scatter to the surgeon. The shielding ratio by lead apron was 95.2%. The TLD exposure for the first assistant was 0.09 mSv, which corresponded to a surgical field exposure of 1.61%. The difference between surgeon and first assistant was 0.03 mSv. The distance-securing TLD was 0.06 mSv and corresponded to 1.08% of exposure in the surgical field (Table 2).

Discussion

Although medical workers generally experience very low radiation exposures, the exposure to those performing fluoroscopically-guided procedures including orthopaedic trauma surgeons and personnel is relatively high [14]. This risk has been recently exacerbated by the increased use of complex fluoroscopically-guided trauma surgeries including MIPO and percutaneous procedures. Therefore, the concern regarding the harmful effects of radiation exposure has led us to find ways to keep radiation exposures as low as reasonably achievable, and the effective use of image intensifier and radiation shielding in the operation theatre has assumed a much greater importance during surgery. Safe practices include minimizing the image intensifier use time and keeping a safe distance from the image intensifier for as long as possible. Recognizing these issues, the present prospective enrolment and retrospective analysis addressed ways on how to minimize radiation exposure to the surgeon and all personnel in the operation theater.

Throughout this investigation, as with other reports [15,16], we could verify the necessity for the surgeon's perception of radiation hazards and having a clear strategy for reducing the exposure to intraoperative emission and radiation scatter. From 2006, even before this investigation, our orthopaedic trauma team had been discussing ways to reduce use time and radiation scatter from the image intensifier and realized some facts: (1) Junior surgeons and orthopaedic trainees frequently used the fluoroscopic mode (continuous mode) during interlocking screw insertion of intramedullary nailing and K-wire fixation. (2) Their surgical assistance without wearing the lead apron was not relatively uncommon during surgeries owing to inconvenience. (3) The assistant and ORP did not receive a training program for reducing the radiation hazard related to the image intensifier. As such, we had to implement a clear strategy, which included guidelines for room set-up during fluoroscopically-guided surgery and for minimizing use time. Recently, Gendelberg et al. [15] also reported on the effectiveness of a radiation-safety program to decrease radiation exposure to residents and patients. Since the laser marking was not available at our institute, the skin marks to denote the implant position, facture site and joint surface were made routinely, and the expected length and direction of implant were determined roughly before skin incision. Besides, after each operation was finished, our team always checked the use time and was reminded of the using patterns. Through this, we came to know this strategy as being very helpful in reducing intraoperative radiation emission through internal assessment. Considering the total use time of 141 minutes and 56 seconds, each operation might have a mean use time 46 seconds, which was not much for using an image intensifier. Although the actual time of fluoroscopy use in each operation was not recorded, the surgeon's perceptions about radiation risk led to an economical use of the image intensifier equipment [16].

With regards to radiation exposure in the operating theater, the secondary exposure from radiation scatter must be also considered. Compared to primary exposure, this type of exposure has another dependent factor, and that was to keep a safe distance away from the source, although this has not been clearly defined [5,17]. Schils et al. [18] outlined a new delivery system that allows for bone cement injection to take place about 1.2 m away from the fluoroscopy source. They noted that compared to other methods the radiation exposure to surgeons could be significantly reduced using this strategy. The authors frequently applied the provisional K-wire fixation and intraoperative external fixation to maintain the functional reduction, which enabled the surgeon and the first assistant to not directly hold the instruments and maintain a distance from the surgical field during the procedure. In our arrangement, the operating theater was configured so that the monitor was against a wall and at least 1.5 m away from the operating table. In this fashion, before the image intensifier was activated, the surgeon and assistants moved toward the monitor to check the fluoroscopic images.

When we could not move toward the monitor, the rotation of the assistant's head and body was away from the patient for checking the images. This practice also helps in diminishing radiation scatter to the neck and the eye [10]. With this simple practice of consistently placing the monitor against the wall, the total radiation exposure recorded by the surgeon's TLD was only 1.25 mSv on the lead apron, despite a total exposure time of nearly 142 min. These values was less than the respective values of 5.22 mSv for exposure of 170 min, 34 sec [19]. Both of these studies reveal the appreciable

reduction of about 4-fold in radiation exposure for the surgeon, although there was just only a difference of 16% in the use-time.

Despite many efforts, radiation scatter for the surgeon was 22.4% (1.25 mSv) of the surgical field, which was unexpectedly high. For the first assistant, on the basis of exposure below the apron, the radiation amount for 18 months was at least 1.88 mSv and possibly more, as the assistants hold equipment and patient limbs near the image intensifier more proximally and frequently than the surgeon. However, the TLD reading behind of image intensifier was 0.06 mSv, which corresponded to 1.08% of exposure in the surgical field.

This TLD might have been as low as reasonably achievable, because it was always placed behind the image intensifier at a distance of 146 cm from the X-ray tube. Considering that this TLD was equally exposed to that below the lead apron of the surgeon, we realize that the 146 cm distance from radiation source is not free from radiation scatter. Therefore, if this distance secured measurement is assumed to be the radiation exposure of ORP including the scrub nurse, anesthesiologist, they should at least be 1.5 m away from the image intensifier and the patient while wearing a lead apron.

Despite our interesting findings, there were some fundamental limitations to the study including the lack of an adequately powered direct comparison group, lack of measuring radiation exposure to the surgeon's hands, and lack of data for fluoroscopic time for each operation. Nonetheless, our results again clearly demonstrate that the intraoperative radiation emission and exposure by an image intensifier could be appreciably reduced by the surgeon's awareness of radiation hazards and clear strategies in reducing radiation exposure. To keep radiation exposures to as low as reasonably achievable, the ORP should be at least 1.5 m from the radiation source, each wearing a lead apron, while minimizing the operating time for the radiologic source.

Conclusion

By the simple strategy of being mindful of use patterns and placing the fluoroscopic monitor against a wall, at least 1.5 m away from the operating table, an orthopaedic trauma team could significantly reduce radiation exposure. Through the analysis of distance-maintaining TLD (146 cm), the radiation exposure might be kept to as low as possible by maintaining of at least a 1.5 m distance from the radiation source and wearing a lead apron. The present study confirmed that radiation exposure in orthopaedic trauma surgery could be reduced by increased awareness by the surgeon and ORP of the safety practices in the operating room.

Authors' Contribution

GH designed and control all the process for this study and performed the surgery. JM collected information related with the study as the main drafter. SK participated in its design and coordination and helped to collect information. All authors read and approved the final manuscript.

Conflict of Interest

None declared.

Funding

None declared.

References

1. Levin PE, Schoen RW, Browner BD. Radiation exposure to the surgeon during closed interlocking intramedullary nailing. J Bone Joint Surg Am 1987, 69: 761-766.
2. Mahaisavariya B, Songcharoen P, Riansuwan K. Radiation scattering to the primary surgeon during closed locked femoral nailing. J Med Assoc Thai 2005, 88: 252-255.
3. Muller LP, Suffner J, Wenda K, et al. Radiation exposure to the hands and the thyroid of the surgeon during intramedullary nailing. Injury 1998; 29: 461-468.
4. Young M, Dempsey M, Rocha Ade L, et al. The cross-table lateral radiograph results in a significantly increased effective radiation dose compared with the Dunn and single frog lateral radiographs. J Pediatr Orthop 2015; 35: 157-161.
5. Wang J, Liu H, Zhang K, et al. Reducing radiation exposure during kyphoplasty with the use of a remote-control injection system: A prospective study. Spine (Phila Pa 1976) 2015; 40: E127-132.
6. McArthur N, Conlan DP, Crawford JR. Radiation exposure during scoliosis surgery: A prospective study. Spine J 2015; 15: S33-36.
7. Fan G, Fu Q, Zhang H, et al. Direct-beam radiation exposure to surgeons during pinning of supracondylar humerus fractures. J Pediatr Orthop 2015; 35: e37.
8. Zabel EW, Alexander BH, Mongin SJ, et al. Thyroid cancer and employment as a radiologic technologist. Int J Cancer 2006; 119: 1940-1945.

9. Ronckers CM, Erdmann CA, Land CE. Radiation and breast cancer: a review of current evidence. Breast Cancer Res 2005; 7: 21-32.
10. Lee K, Lee KM, Park MS, et al. Measurements of surgeons' exposure to ionizing radiation dose during intraoperative use of C-arm fluoroscopy. Spine (Phila Pa 1976) 2012; 37: 1240-1244.
11. Jung GH, Jang JH, Kim JD, et al. Radiation exposure over the course of a year from an image intensifier in the orthopaedic operating room. J Korean Fracture Soc 2012; 25: 58.
12. Fuchs M, Schmid A, Eiteljorge T, et al. Exposure of the surgeon to radiation during surgery. Int Orthop 1998; 22: 153-156.
13. Bar-On E, Weigl DM, Becker T, et al. Intraoperative C-arm radiation affecting factors and reduction by an intervention program. J Pediatr Orthop 2010; 30: 320-323.
14. Linet MS, Kim KP, Miller DL, et al. Historical review of occupational exposures and cancer risks in medical radiation workers. Radiat Res 2010; 174: 793-808.
15. Gendelberg D, Hennrikus W, Slough J, et al. A radiation safety training program results in reduced radiation exposure for orthopaedic residents using the mini C-arm. Clin Orthop Relat Res 2016; 474: 580-584.
16. Chow R, Beaupre LA, Rudnisky CJ, et al. Surgeons' perception of fluoroscopic radiation hazards to vision. Am J Orthop (Belle Mead NJ) 2013; 42: 505-510.
17. Mehlman CT, DiPasquale TG. Radiation exposure to the orthopaedic surgical team during fluoroscopy: "how far away is far enough?". J Orthop Trauma 1997; 11: 392-398.
18. Schils F, Schoojans W, Struelens L. The surgeon's real dose exposure during balloon kyphoplasty procedure and evaluation of the cement delivery system: a prospective study. Eur Spine J 2013; 22: 1758-1764.
19. Kim JW, Kim JJ. Radiation exposure to the orthopaedic surgeon during fracture surgery. J Korean Orthop Assoc DE 2010; 45: 107-113.

This manuscript was peer-reviewed
Mode of Review: Single-blinded
Academic Editor: Dr. Ikhlas Abdelaziz Hassan Mohamed